Force Engineering & Testing
19530 Ramblewood Drive
Humble, Texas 77338
Phone: (281) 540-6603 FAX: (281) 540-9966
Website: www.forceengineeringtesting.com

Product Evaluation Report

McELROY METAL, INC.

Maxima 218 24 Ga. Roof Panel over open framing

Florida Product Approval # 30915.2 R2

Florida Building Code 2023
Per Rule 61G20-3
Method: 1 –D

Category: Structural Components
Subcategory: Roof Deck
Compliance Method: 61G20-3.005(1)(d)
NON HVHZ

Product Manufacturer:
McElroy Metal, Inc.
1500 Hamilton Road
Bossier City, LA 71111

Engineer Evaluator:
Johnathan Green, P.E. #88223
Florida Evaluation ANE ID: 12901

Contents:

Evaluation Report: Page 1 - 4
Details: Page 5

SEP 22 2023

JOHNATHAN GREEN
LICENSE
No. 88223
STATE OF
FLORIDA
PROFESSIONAL ENGINEER

THIS DOCUMENT HAS BEEN DIGITALLY SIGNED AND SEALED BY JOHNATHAN GREEN ON THE DATE ADJACENT TO THE SEAL.

PRINTED COPIES OF THIS DOCUMENT ARE NOT CONSIDERED SIGNED AND SEALED AND THE SIGNATURE MUST BE VERIFIED ON ANY ELECTRONIC COPIES.

Force Engineering & Testing
19530 Ramblewood Drive
Humble, Texas 77338
Phone: (281) 540-6603 FAX: (281) 540-9966
Website: www.forceengineeringtesting.com

Compliance Statement: The product as described in this report has demonstrated compliance with the Florida Building Code 2023, Sections 1504.3.2, 1504.7.

Product Description: Maxima 218 24 Ga. Steel Roof Panel, 18" Coverage, standing seam structural roof panel. Structural Application.

Panel Material/Standards: Material: 24 Ga. Steel, conforming to Florida Building Code 2023 Section 1507.4.3.
Yield Strength: Min. 50.0 ksi
Corrosion Resistance: Panel Material shall comply with Florida Building Code 2023, Section 1507.4.3.

Panel Dimension(s):

Thickness:	0.024" min.
Coverage:	18" nominal coverage
Rib:	2" tall standing seam rib
Panel Seam:	Mechanically seamed 90-degree seam

Panel Clips:

Product Name:	MC 120310 Low Floating Clip
Description:	22 Ga. Steel top, 16 Ga. steel base
Corrosion Resistance:	Per Florida Building Code 2023 Section 1506.7

Panel Clip Fastener: (2) ¼-14 x 1 ¼" HWH SD no washer per clip
Corrosion Resistance: Per Florida Building Code 2023, Section 1517.6

Substrate Description: Min. 16 Ga. Steel Framing. Must be designed in accordance w/ Florida Building Code.

Allowable Design Uplift Pressures:

Panel System:	**Maxima 218 24 Ga. 18" Coverage**								
Clip Spacing (O.C.):	5'-0"	4'-6"	4'-0"	3'-6"	3'-0"	2'-6"	2'-0"	1'-6"	1'-0"
Allowable Design Uplift Pressure (PSF):	-28.6	-40.6	-52.7	-64.7	-76.7	-88.8	-100.8	-112.8	-124.9

Force Engineering & Testing
19530 Ramblewood Drive
Humble, Texas 77338
Phone: (281) 540-6603 FAX: (281) 540-9966
Website: www.forceengineeringtesting.com

Code Compliance: The product described herein has demonstrated compliance with The Florida Building Code 2023, Section 1504.3.2, 1504.7.

Evaluation Report Scope: The product evaluation is limited to compliance with the structural wind load requirements of the Florida Building Code 2023, as relates to Rule 61G20-3.

Performance Standards: The product described herein has demonstrated compliance with:

- ASTM E 1592-05 (2017) Test method for structural performance of sheet metal roof and siding systems by uniform static air pressure difference.
- FM 4471-92, Foot Traffic Resistance Test

Reference Data:

1. ASTM E 1592-05 (2012)
   Force Engineering & Testing, Inc. (FBC Organization # TST-5328)
   Report No. 90-0156T-19A, B
2. FM 4471-95, Foot Traffic Resistance Test
   Force Engineering & Testing, Inc. (FBC Organization # TST-5328)
   Report No. 90-0156T-19C
3. Certificate of Independence
   By Johnathan Green, P.E. (No. 88223) @ Force Engineering & Testing
   (FBC Organization # ANE ID: 12901)

Test Standard Equivalency: The FM 4471-95 test standard is equivalent to the FM 4471-92 test standard.

The ASTM E1592-05(2012) test standard is equivalent to the ASTM E1592-05(2017) test standard.

Quality Assurance Entity: The manufacturer has established compliance of roof panel products in accordance with the Florida Building Code and Rule 61G20-3.005 (3) for manufacturing under a quality assurance program audited by an approved quality assurance entity.

Minimum Slope Range: Minimum Slope shall comply with Florida Building Code 2023, including Section 1507.4.2 and in accordance with Manufacturers recommendations.

Installation: Install per manufacturer's recommended details.

Insulation: Manufacturer's approved product (Optional)

Roof Panel Fire Classification: Fire classification is not part of this evaluation.

Force Engineering & Testing
19530 Ramblewood Drive
Humble, Texas 77338
Phone: (281) 540-6603 FAX: (281) 540-9966
Website: www.forceengineeringtesting.com

Shear Diaphragm: Shear diaphragm values are outside the scope of this report.

Design Procedure: Based on the dimensions of the structure, appropriate wind loads are determined using Chapter 16 of the Florida Building Code 2023 for roof cladding wind loads. These component wind loads for roof cladding are compared to the allowable pressure listed above. The design professional shall select the appropriate erection details to reference in his drawings for proper fastener attachment to his structure and analyze the panel fasteners for pullout and pullover. Support framing must be in compliance with Florida Building Code 2023 Chapter 22 for steel, Chapter 23 for wood and Chapter 16 for structural loading.

Force Engineering & Testing
19530 Ramblewood Drive
Humble, Texas 77338
Phone: (281) 540-6603 FAX: (281) 540-9966
Website: www.forceengineeringtesting.com

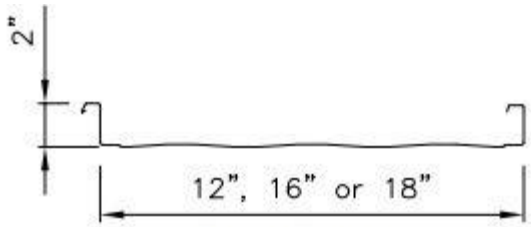

STRIATED PROFILE
(Standard)

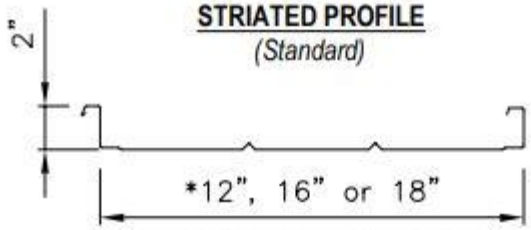

BEAD (PENCIL RIB) PROFILE
(Option)

***NOTE**:
12" wide panel has a single Pencil Rib

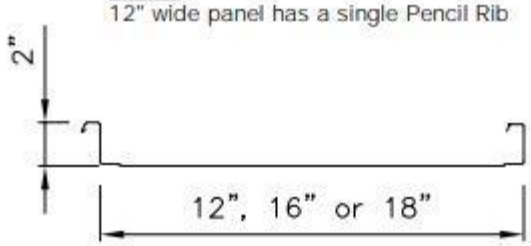

FLAT PAN PROFILE
(Option)

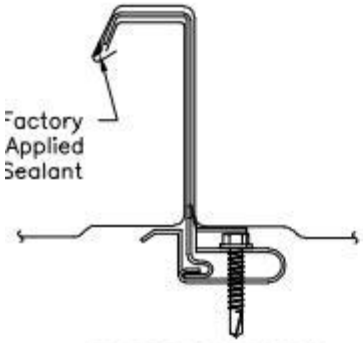

BEFORE SEAMING

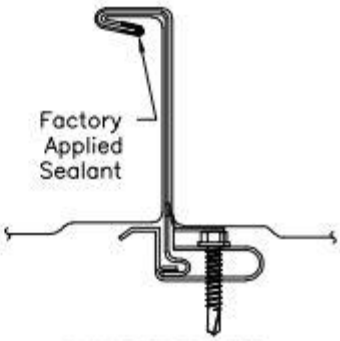

AFTER SEAMING
90° SEAM